GEM®

Professional Electric Lock

Magnetic Lock For Outdoor Use – Water Proof

10003M
- 150kg Flush Mount
- Power Source:DC12V/300mA
- Dimensions:200Lx32Wx24Dmm

GL-1200R
- 600kg Surface Mount
- Power Source:DC12V/250mA
- Dimensions:202Lx62Wx40Dmm

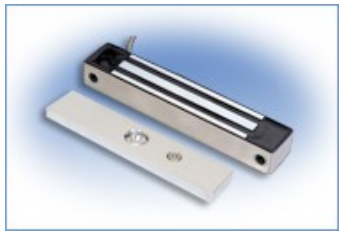

10003S
- 150kg Surface Mount
- Power Source:DC12V/300mA
- Dimensions:170Lx32Wx24Dmm

10006S
- 350kg Surface Mount
- Power Source:DC12V/350mA
- Dimensions:216Lx52Wx30Dmm

Magnetic Lock For Indoor Use

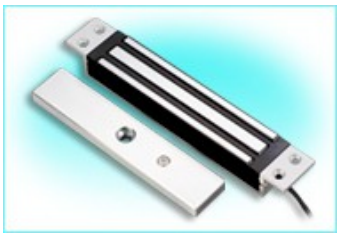

10000
- 250kg Flush Mount
- Power Source:DC12V/500mA
- Dimensions:230Lx38Wx27Dmm

10001
- 250kg Surface Mount
- Power Source:DC12V/500mA
  :DC24V/250mA
- Dimensions:268Lx68Wx40Dmm

Magnetic Shear Lock

GS705-30
- 900kg Flash Mount
- Power Source:DC12-24V
- Dimensions:
  251Lx30Wx40Dmm
  267Lx30Wx40Dmm

Magnetic Door Holder

GD-830 Wall Flush Mount

GD-830F Floor Mount

GD-830 Series
- Holding Force:Max. 80 lbs
- Input Voltage:DC24V
  * DC12V Available
- Current:60mA@24Vdc
- Release Button
- Anti-Residual Design

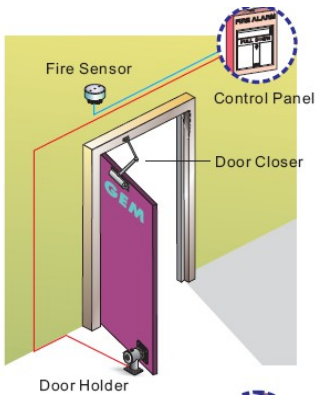

Double Magnetic Lock For Indoor Use

EM-NH2300 *272kg x 2*
- Surface Mount For Double Door
- Power Source:DC12V/1000mA
  :DC24V/500mA
- Dimensions:500Lx46Wx25Dmm
- Weight:4.0kg(Approx.)

10040 *500kg x 2*
- Surface Mount For Double Door
- Power Source:DC12V/1000mA
  :DC24V/500mA
- Dimensions:538Lx68Wx40Dmm
- Weight:9.5kg(Approx.)

Mounting Bracket

MBK-U02
- U Bracket For 12mm Glass Door
- Use With 10001 & CHC-14
- Size : 190(L)x45(H)x22(W)mm

MBK-100
- Z Type Bracket For Magnetic Locks
  10003S, 10006S & 10001 Use

MBK-10003S / 10006S
- L Type Bracket
  For 10003S / 10006S Use

MBK-10001
- L Type Bracket For Magnetic Locks
  10001& CHC-14 Use

ANSI Sized Electric Strike

GK-300 / GK-310

- Fail Safe or Secure Selectable
- For Metal Frames Door Use
- Stainless Steel Plate Ensures
- Power Source:DC12V/250mA

GK-301 / GK-311

- Fail Safe or Secure Selectable
- For Wood Frames Door Use
- Stainless Steel Plate Ensures
- Power Source:DC12V/250mA

Dimensions :

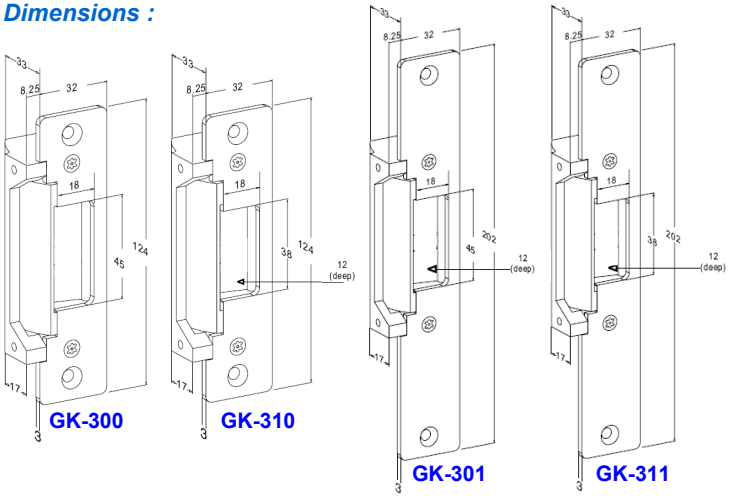

Surface Mount Type Electric Strike

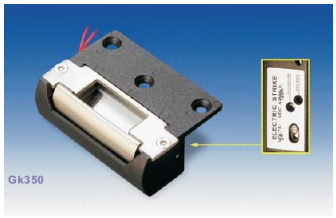

GK-350

- Fail Safe or Secure Selectable
- For Metal Frames Door Use
- Stainless Steel Plate Ensures
- Power Source:DC12V/250mA
- Dimensions:62Lx86Hx32.5Dmm

Electric Bolt Lock For Full Glass Door

EB-195VGL is specially designed for double swing frameless glass door.

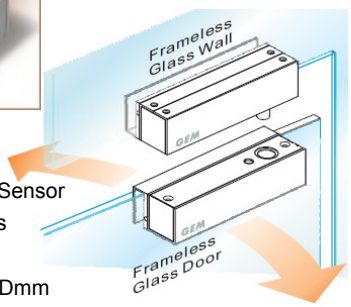

EB-195VGL

- Door Position & Bolt Status Sensor
- Time Delay: 0/3/6/9 Seconds
- Power Source:DC12/24V
- Dimensions:212Lx56Hx53.5Dmm

Mounting Bracket For 12mm Full Glass Door

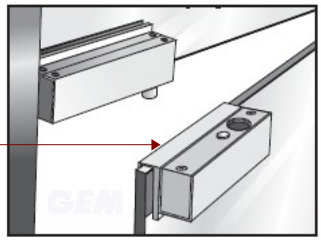

MBK-U01

- Stainless Steel Housing
- Use With EB-200 & CHC-11
- Dimensions:100Lx45Hx55Wmm

Electric Bolt Lock (Fail-Safe)

EB-200

- Magnetic Sensor & Time Delay
- Power Source:DC12V
- Dimensions:203Lx42Wx41Dmm

EB-220

- Magnetic Sensor & Time Delay
- Power Source:DC12V
- Dimensions:220Lx38Wx38Dmm

EB-180

- Magnetic Sensor & Time Delay
- Power Source:DC12/24V
- Dimensions:210Lx25Wx41Dmm

Electric Bolt Lock(Fail-Secure)

EB-260
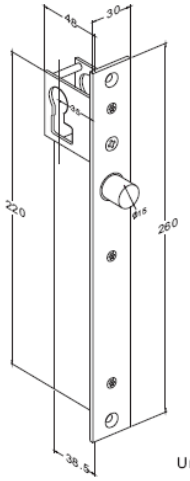
- Magnetic Sensor & Time Delay
- Installed on Door With Cylinder
- Power Source:DC12 ~ 28V
- Dimensions:260Lx30Wx48Dmm